VINEYARD SUPPLY INC

Vineyard & Orchard Products Catalog

TEL: 707.963.5354 • FAX: 707.967.8242

1192 Maple Lane, Bldg A • Calistoga, CA 94515

www.ajvineyardsupply.com

VINEYARD SUPPLY INC

Sales Team

Offering You A Full Line Of Vineyard & Orchard Products

Augusto Di Battista
707 963-5354 Office
707 696-7859 Cell
adb@ajvineyardsupply.com

Jennifer Di Battista
Administrative Support
707 963-5354 Office
jdb@ajvineyardsupply.com

Antonio Zamora
707 963-5354 Office
707 256-9469 Cell
antonio@ajvineyardsupply.com

Rafael Montanez
707 963-5354 Office
707 320-7263 Cell
rafael@ajvineyardsupply.com

Francisco Navarrete
707 963-5354 Office
francisco@ajvineyardsupply.com

Table of Contents

GRAPESTAKES

Steel Grapestake T-post - With Spade / No Spade - Unpainted 4
Steel Training Stakes - 2.72 5
Steel Grapestakes - 2.72 5

VERTICAL LINE POSTS

Rolled Edge 6
Supra Grande 6

TRAINING STAKES

Bamboo 7
Pencil Rod 7
Cut Rebar 8

EARTH ANCHORS

Earth Anchors 8

END POSTS

New & Used Oil Well Pipe 9
RibBak 10
V-3 11

VINEYARD WIRE

Class 1 & 3 12

CROSSARMS

V-Style 13
Mau & L Styles 14
Open-Lyre & Snap-In Clip 15

WOOD PRODUCTS

End Posts 16
Grape/Training Stakes 16

GROW TUBES 16

Table of Contents

TYING SUPPLIES ……..……..….….17

EROSION CONTROL …….……...18

IRRIGATION SUPPLIES …….…..…...19

SAFETY SUPPLIES …….19

PRUNING SPPLIES …….……...20

BIRD CONTROL.……...….…….……....21

HARVEST SUPPLIES.. …….……21

TRELLISING HARDWARE
Hardware – U-Bolts …….……...22
Staples & Bar Ties …….....23
Clips & Fasteners …….……24

FENCING PRODUCTS
Barbed Wire.…….…….25
Field, Deer & Rabbit Fence……...……..……25
Gates..…….……..……..25

TOOLS
Post Pounders / Crimp Tools / Gripple Tool …….……....26

APPENDICES
Technical Information & Tables ……..….……27-28
Vine/Wire Calculator …….……29
A&J Vineyard Supply Credit App …….……..…….30
Sales Tax Exemption Form …….…..……..31

Steel T-post - Spade / No Spade - Unpainted

- Used as general purpose grape stake
- Wires can be directly fixed or add crossarms to construct various styles of trellis systems
- Studs prevent wire slippage
- Import & domestic available

Steel Stakes - Grapestake T-posts - No Spade - Unpainted

Length/ft	Lbs/ft	Wt/ea	Pieces/Bdl	Truck Qty
4.0	0.95	3.80	300	12300
5.0	0.95	4.75	300	9900
5.5	0.95	5.32	300	9000
6.0	0.95	5.70	300	8100
6.5	0.95	6.18	300	7500
7.0	0.95	6.65	300	6900
8.0	0.95	7.60	300	6000
6.0	1.25	7.50	200	6200
7.0	1.25	8.75	200	5400
8.0	1.25	10.00	200	4800
9.0	1.25	11.25	200	4200
10.0	1.25	12.50	200	3800

Steel Stakes - Grapestake T-posts - With Spade - Unpainted

Length/ft	Lbs/ft	Wt/ea	Pieces/Bdl	Truck Qty
6.0	1.25	7.88	200	6200
6.5	1.25	8.50	200	6000
7.0	1.25	9.13	200	5200
8.0	1.25	10.38	200	4600
9.0	1.25	11.63	200	4200
10.0	1.25	12.88	200	3800
5.0	1.33	7.05	200	6200
6.0	1.33	8.36	200	6200
6.5	1.33	9.02	200	5200
7.0	1.33	9.71	200	5000
8.0	1.33	11.04	200	4200
9.0	1.33	12.37	200	4000
10.0	1.33	13.70	200	3600

Grapestakes/Training Stakes - 2.72

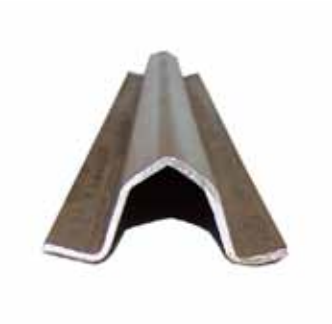

- 2.72 hot rolled general purpose steel grape stake
- Can be used with the addition of crossarms for any system
- Ideal for impact sprinkler riser assemblies

Steel Stakes - Training Stakes - 2.72

Length/ft	Gauge	Wt/ea	Pieces/Bdl	Truck Qty
4.0	14.00	2.65	500	18000
4.0	16.00	2.25	500	21000
5.0	14.00	3.30	500	14500
5.0	16.00	2.80	500	16500

Steel Stakes - Grapestakes - 2.72

Length/ft	Gauge	Wt/ea	Pieces/Bdl	Truck Qty
6.0	14.00	4.80	500	9500
6.0	16.00	4.05	500	11500
7.0	13.00	7.20	500	6500
7.0	14.00	5.60	500	8000
7.0	16.00	4.72	500	9500
8.0	13.00	8.20	500	5500
8.0	14.00	6.40	500	7000
9.0	13.00	9.25	500	5000
9.0	14.00	7.20	500	6500

Vertical Line Posts - Rolled Edge/Supra Grande

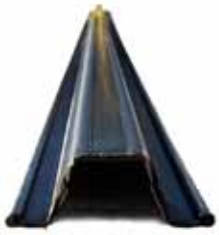

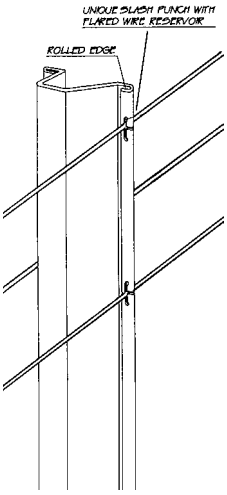

ROLLED EDGE

· For vertical shoot positioning (VSP) trellising systems

· Multiple wire movement · Parallel slots every 6 inches

· Rolled edge conducive to mechanical harvesting

· Crossarms can be added by use of appropriate hardware

Steel Stakes - Vertical Line Posts - Rolled Edge

Length/ft	Gauge	Wt/ea	Pieces/Bdl	Truck Qty
Hot Rolled Black				
5.0	13.00	6.25	200	7200
6.0	13.00	7.50	200	6400
7.0	13.00	8.75	200	5200
8.0	12.00	12.00	200	4000
8.0	13.00	10.00	200	4600
8.5	13.00	10.63	200	4400
9.0	12.00	13.50	200	3400
9.0	13.00	11.25	200	4200
30" Hot Dip Galvanized and Fully Galvanized				
5.0	13.00	6.25	200	7600
6.0	13.00	7.50	200	6400
7.0	13.00	8.75	200	5400
8.0	12.00	12.00	200	3800
8.0	13.00	10.00	200	4600
8.5	13.00	10.63	200	4400
9.0	12.00	13.50	200	3400
9.0	13.00	11.25	200	4200

SUPRA GRANDE

· Rolled edges · Versatile & Durable

· 50% more strength · Mechanical harvester friendly

· Top quality manufacturing

Steel Stakes - Vertical Line Posts - Supra Grande - Black

Length/ft	Gauge	Wt/ea	Pieces/Bdl	Truck Qty
7.0	13.00	8.75	200	5400
8.0	12.00	12.00	200	4000
8.0	13.00	10.00	200	4600
9.0	12.00	13.50	200	4200
9.0	13.00	11.25	200	4200

Training Stakes - Bamboo & Pencil Rod

Bamboo

- Used to train new vines
- Economical

Stakes - Training Stakes - Bamboo

Length/ft	Dia/in	Wt/ea	Pieces/bdl
3.0	0.375	0.019	500
4.0	0.375	0.025	500
5.0	0.375	0.031	500
3.0	0.500	0.040	250
4.0	0.500	0.050	250
5.0	0.500	0.060	250
7.0	0.625	0.400	100

Pencil Rod

- Used to train new vines
- Hot rolled & straightened wire product
- Low cost & easy to install

Steel Stakes - Training Stakes - Pencil Rod

Length/ft	Dia/in	Wt/ea	Pieces/bdl	Truck Qty
3.0	0.218	0.383	100	125250
3.0	0.230	0.439	100	109250
4.0	0.218	0.510	100	87750
4.0	0.230	0.586	100	65250
5.0	0.218	0.640	100	70250
5.0	0.230	0.733	100	63000

Training Stakes - Cut Rebar

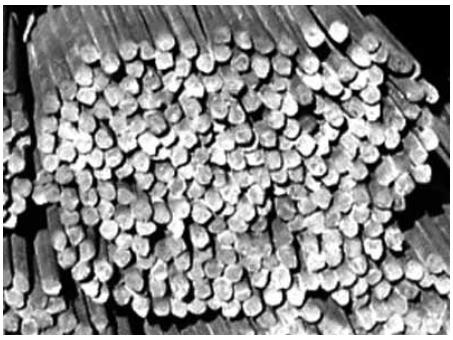

- Used to train new vines
- Advisable for rocky soil

Steel Stakes - Training Stakes - Cut Rebar

Length/in	Dia/in	Wt/ea	Pieces/bdl	Truck Qty
36	0.375	1.125	266	40000
42	0.375	1.313	266	34000
48	0.375	1.500	266	30000
60	0.375	1.870	266	24000
72	0.375	2.244	266	20000

Earth Anchors

- Double welded helix
- Welded eye

Earth Anchors

Helix/in	Length/ft	Dia/in	Wt/ea	Pieces/bdl	Truck Qty
4.0	2.5	0.625	3.20	200	9600
6.0	3.0	0.750	5.50	200	8000
8.0	3.0	0.750	6.25	200	6857
6.0	4.0	0.750	8.10	200	6800
8.0	4.0	0.750	9.00	200	6000

Steel End Posts - New & Used Oil Well Pipe

- May eliminate need for anchor
- Replaces wood end post due to superior strength and longevity
- Compatible with mechanical harvesters
- Welded spade** 24″ on 7′, 30″ on 8′, 9′ and 40″ on 10′
- Standard wrap around spade 8″ x 15″ - special sizes availabl
- In-house welding allows for custom placement of spade
- Double spade also available

* 3.5″ dia also available

**Spade position is calculated from bottom of post to top of spade.

Steel End Posts - New Oil Well Pipe, 2-7/8" dia*

Length/ft	Wall(mm)	Wt/ea	Pcs/bdl	Truck Qty
No Spade				
8.0	4.500	45.00	50	1050
8.0	5.000	52.00	50	900
9.0	4.500	51.00	50	860
9.0	5.000	58.00	50	830
10.0	4.500	57.00	50	830
10.0	5.000	64.50	50	730
With Spade				
8.0	4.500	51.00	50	930
8.0	5.000	58.00	50	830
9.0	4.500	57.00	50	830
9.0	5.000	64.00	50	750
10.0	4.500	63.00	50	750
10.0	5.000	70.50	50	680
Spade only - 8x15				
	0.120	5.25		
Spade only - 16x16				
	0.120	8.56		

Steel End Posts - Used Oil Well Pipe, 2-7/8" dia*

Length/ft	Wall(mm)	Wt/ea	Pcs/bdl	Truck Qty
No Spade				
8.0	6.000	53.00	50	900
9.0	6.000	59.00	50	800
10.0	6.000	65.50	50	700
With Spade				
8.0	6.000	58.00	50	780
9.0	6.000	64.00	50	750
10.0	6.000	70.50	50	650
Spade only - 8x15				
	0.120	5.25		
Spade only - 16x16				
	0.120	8.56		

Steel End Posts - RibBak

- Ideally suited for rocky or hardpan soil conditions
- High Carbon steel
- End Posts available in 8′, 9′ & 10′ lengths
- 2#, 3#, 4# & 5# per linear foot

Steel End Posts - RibBak

Length/ft	Lbs/ft	Wt/ea	Pcs/bdl	Truck Qty
No Spade				
8.0	2.00	16.00	100	2700
8.0	3.00	24.00	100	2000
8.0	4.00	32.00	100	1500
8.0	5.00	40.00	100	1200
9.0	2.00	18.00	100	2400
9.0	3.00	27.00	100	1750
9.0	4.00	36.00	100	1300
9.0	5.00	45.00	100	1050
10.0	2.00	20.00	100	2200
10.0	3.00	30.00	100	1600
10.0	4.00	40.00	100	1200
10.0	5.00	50.00	100	950
With Spade				
8.0	2.00	21.75	50	2000
8.0	3.00	29.75	50	1600
8.0	4.00	37.75	50	1250
8.0	5.00	45.75	50	1050
9.0	2.00	23.75	50	1800
9.0	3.00	32.75	50	1450
9.0	4.00	41.75	50	1150
9.0	5.00	50.75	50	950
10.0	2.00	25.75	50	1700
10.0	3.00	35.75	50	1300
10.0	4.00	45.75	50	1050
10.0	5.00	50.00	50	850
Spade only - 8x15				
		5.75		

Steel Endposts - V-3

- Compatible with most mechanical harvesters due to narrow design (3″ wide)
- Use of holes prevents wire slippage or corrosion by contact to post itself
- 12 holes - 1/2″ in diameter and 3″ apart to allow wire vises or wire connecting hardware
- Welded spade - 24″ on 7′ **30″ on 8′, 9′** 40″ on 10′**
  **Spade position is calculated from bottom of post to top of spade
- Hot rolled
- Drip wire hole 24″ from top of spade
- In most cases eliminates need for secondary tieback anchoring system
- In-house welding allows for custom placement of spade
- Double spade also available

Steel End Posts - V-3

Length/ft	Lbs/ft	Wt/ea	Pcs/bdl	Truck Qty
No Spade				
8.0	4.000	32.00	50	1500
9.0	4.000	36.00	50	1300
10.0	4.000	40.00	50	1200
With Spade				
8.0	4.000	37.75	50	1250
9.0	4.000	41.75	50	1150
10.0	4.000	45.75	50	1050
Spade only - 8x15				
		5.75		

Vineyard Wire - Class 1 & 3

- Class I & Class 3 - Galvanized
- High tensile and soft
- Manufactured to ASTM-A641 specifications
- Min. PSI 170k lbs, Max. PSI 220k lbs
- 100 lb or continuous

Vineyard Wire - Class 1 & 3

Gauge	Ft per coil	Wt per coil
100 Lbs. Coil		
10.00	2,050	100
11.00	2,582	100
12.00	3,370	100
12.50	4,000	100
13.00	4,470	100
14.00	5,860	100
Continuous		
10.00		1,600
11.00		1,600
12.00		1,600
12.50		1,600
13.00		1,600
14.00		1,600

Catch Coil, Layer Wound & Continuous Coils in stock

Crossarms - V-Style

- Used to raise the canopy off the cordon and open up fruit zone to air and light
- Ideal for close spaced vineyards because the elevated "V" allows tractor tires to pass underneath
- Manufactured with two sets of catch wire notches as well as end slots
- Both styles come pre-punched with hole pattern to fit all stakes

V-Style

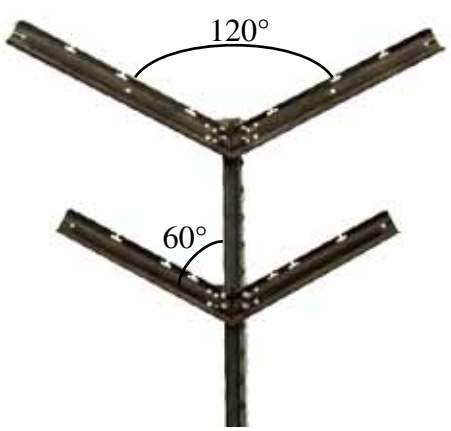

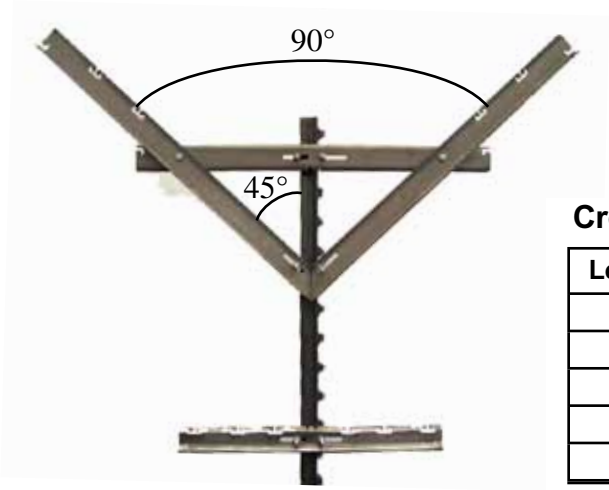

Crossarms - V-Style

Length/in	Gauge	Wt/ea	Pieces/Pallet
24"	12.0	1.89	1,000
30"	12.0	2.26	800
36"	12.0	2.78	700
42"	12.0	3.20	600
48"	12.0	3.95	500

Custom Welded V-Style (special order only)

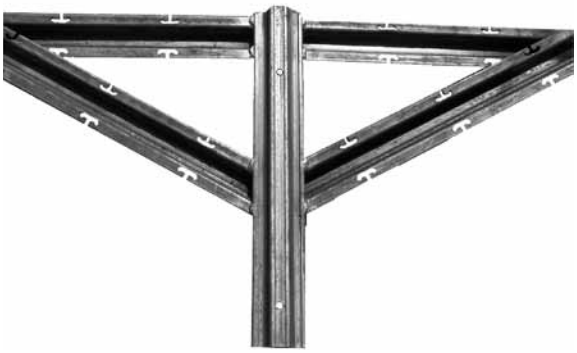

Crossarms - Mau & L Styles

- Canopy management crossarms used as foliage wire spreaders to trap the foliage in upright position for a vertical trellising system
- 10″ has 4 notches (2 each side)

Mau Style

Crossarms - Mau Catch Wire

Length/in	Gauge	Wt/ea	Pieces/Pallet
4.375	11.0	0.21	15,000
6.000	11.0	0.29	15,000
10.000	11.0	0.48	10,000

L-Style

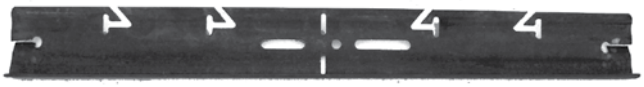

Crossarms - L-Style w/End Slots

Length/in	Gauge	Wt/ea	Pieces/Pallet
6.0	14.0	0.32	5,000
8.0	14.0	0.42	5,000
10.0	14.0	0.53	3,000
12.0	14.0	0.64	2,000
18.0	14.0	0.96	1,500
24.0	14.0	1.28	1,500
30.0	12.0	1.88	1,000
30.0	14.0	1.60	1,000
36.0	12.0	2.26	1,000
36.0	14.0	1.92	1,000
42.0	12.0	2.64	800
42.0	14.0	2.24	800
48.0	12.0	3.01	600
48.0	14.0	2.56	600

- Custom manufactured from prime steel only
- Universal U-bolt hole pattern fits all stakes
- Designed to fit t-posts, grapestakes & rolled edge VLP
- 12 & 14 gauge

Custom Welded Open-Lyre Crossarms

- Uprights and base are welded to form one complete unit
- Mounting brackets available to fit Rolled Edge vertical line post, wood lodge pole and t-post.
- Reduces installation costs by up to 90%
- Quick and easy to install with one machine bolt for steel, two lag screws for wood or two u-bolts for t-post.
- Perfect for managing your vigorous growing varieties
- All lyre systems are custom built in-house to customer's specifications

Crossarms - Open Lyre

Base/in	Gauge	Wt/ea
18.0	13.0	7.97
24.0	13.0	10.63
30.0	13.0	11.25
36.0	13.0	11.88
42.0	13.0	12.50
48.0	13.0	13.13

Crossarms - Snap-In Clip

- Economical crossarm alternative for t-posts

Wood Products

- Pressure Treated Lodge Poles
- Hand-Split Redwood (untreated)
- Hand-Split Cedar (untreated)
- Western Red Juniper (untreated)
- Grape Stakes 2″x2″ 6 & 7 ft lengths
- Tomato Stakes 1″x1″ 4 & 5 ft lengths

- Diameter Sizes: 3″ - 8″
- Lengths: 7′ - 10′
- Special diameters & lengths avalible on request
- Doweled posts in stock in all sizes

Grow Tubes

- Milk Cartons, 1/2 gal
- Milk Cartons, 20 inch
- Treessentials - Clipper Tube

*All models in stock

Tying Supplies

- Tie Tape, green, clear & brown
- Bull Rope
- Binder Twine
- TieFix - biodegradable paper tie
- Kiwi-Locks
- Branch Locks
- Budding Rubbers
- Tapner Tying Guns & Accessories
- T-Bands
- Tying Tools

Erosion Control

- Silt Fence
- Straw Wattles & Wattle Stakes
- Jute Net & Accessories
- Snake Bags
- Straw Bales
- Erosion Control Blanket
- Coconut Mat

Irrigation Supplies

- Drip Hose
- Spaghetti Hose
- Emitters
- Hose Hangers
- K-Curls
- Figure 8

Safety Supplies

- G-Tek Gloves
- Cotton Gloves
- Double Palm Work Gloves
- Cut-Resistant
- Poly Glove
- Safety Glasses

Pruning Supplies

- Felco, Bahco, Corona
- Shears & Loppers
- Replacement blades
- Holsters
- Handheld saws

Bird Control

- Full Coverage Net
- Side Net
- Net Reel w/Flanges
- Reflective Scare Tape
- Bread Clips

Harvest Supplies

- Ring Knives
- Sharpening Stones
- Grape Knives
- Thinning Shears
- Maxi Bins
- Ergonomic Picking Bins
- Grape Lug
- Orchard Thermometers

Trellising Hardware - U-Bolts

REVLP Crossarm Bolt

Pieces/Bag
500

1.25 - 1.33

Pieces/Bag
500

2” Wood Posts

Pieces/Bag
500

Top Notch Long

Pieces/Bag
500

Top Notch Short

Pieces/Bag
500

Standard

Pieces/Bag
500

Line Post

Pieces/Bag
500

.85 - .95

Pieces/Bag
500

Trellising Hardware - Staples/Bar Ties

Staples

Trellising Hardware - Staples

Item description	Gauge	Box Wt
1” Fence	9.0	52.0
1” Vineyard	12.0	52.0
1.25” Fence	9.0	52.0
1.25" Vineyard	12.0	52.0
1.5” Fence	9.0	52.0
1.5” Vineyard	12.0	52.0
1.75” Fence	9.0	52.0
1.5” Galvinized One	9.0	52.0
1.5” Barbed Joiist Hanger	9.0	52.0
2” CLASS 3 Barbed	9.0	52.0
2” Fence	9.0	52.0

Black & Galvanized Bar Ties

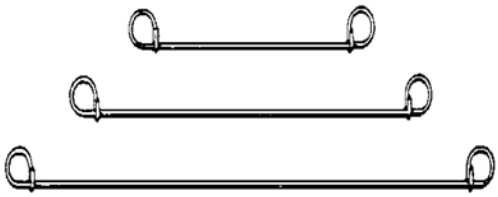

Trellising Hardware - Bar Ties

Length/in	Gauge	Pieces/bag
Black		
4”	16.0	5000
5”	16.0	5000
6”	16.0	5000
8”	16.0	5000
Galvanized		
4”	16.0	5000
5”	16.0	5000
6”	16.0	5000
8”	14.0	5000
10”	14.0	2500
14”	14.0	2500
16”	14.0	2500
21”	14.0	2500

Trellising Hardware - Clips & Fasteners

Fixed Rebar Clip

Line Post Clip

Horizontal Clip

Bamboo Clip

.85 - .95 Clip

1.25 Clip

579 Grapestake Clip

Trellising Hardware - Wire Tension Clips

Item description	Pcs/Box	Wt/Box
Line Post	1000	20.0
.85/.95 Light T-Post	3000	20.0
1.25 Heavy T-Post	3000	20.0
579 Grapestake Universal	3000	20.0
1/4" Horizontal Pencil Rod	3000	20.0
3/8" Horizontal Rebar	3000	20.0
3/8" Fixed Rebar	5000	30.0
Bamboo Vertical	3000	30.0

Gripple Wire Joiners

- Self contained and self locking
- Simply pass the wires through the two holes, tension automatically locks the Gripple to keep your wire secure

Wire Vise

Use with V-3, RibBack or wood end post for smooth end assembly connection
Allows re-tensioning as needed

Crimp Sleeves

- The simple and economical way to tie off or splice single strand wire

Trellising Hardware - Wire Fastners

Item description	Gauge	Pieces/Box
Wire Vise 5056V	14.0	500
Wire Vise 5058V	12.0 & 13.0	500
Crimp Sleeve FW 1-2	14.0	100
Crimp Sleeve FW 2-3	14.0	100
Crimp Sleeve FW 2-3XL	14.0	100
Crimp Sleeve FW 3-4	10.0	50
Gripple Small	14.0, 16.0 & 18.0	800
Gripple Medium	11.0 - 16.0	800
Wire Link 5057V	14.0	500
Wire Link 5059V	10.0 - 13.0	500

Fencing Products & Gates

Field, Deer & Rabbit Fence

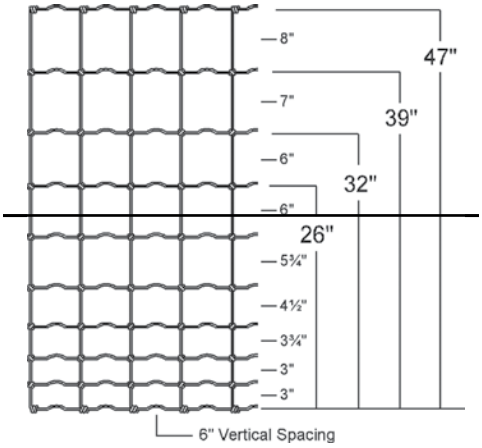

Fencing Products - Field Fence

Description	Length/ft	Gauge	Wt/Roll
Non-Climb			
48" Ranch Hand	100	12.50	122
60" Ranch Hand	100	12.50	151
72" Ranch Hand	100	12.50	179
Deer & Rabbit Fence			
60" Ranch Hand	165	14.50	99
72" Ranch Hand	165	14.50	114

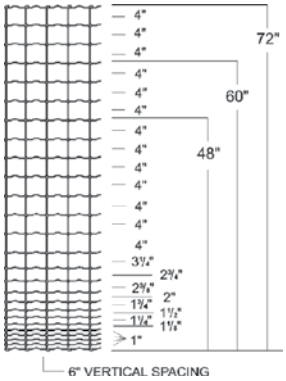

Fence Post Cement

Assorted Custom-Built Gates & Accessories Also Available

Barbed Wire

Fencing Products - Wire - Barbed

Item Description	Length/ft	Gauge	Wt/Roll
2 Point Barb Wire. Hi-Tensile	1,320	15.5	41
4 Point Barb Wire. Hi-Tensile	1,320	15.5	43

Tools

GRIPPLE TOOL

Gripple Tool With Extension Handles

- For use with Gripple & Cable Gripple or other wire vises
- All purpose tensioning tool can apply a pull load of up to 600 pounds

POST POUNDER

Line Posts & T-Posts

CRIMP TOOL

EZ Nico Press Multi-Jaw Crimp Tool

- Position the trellis wires through the crimp sleeve, align the tool around the sleeve, apply hand pressure and the sleeve is permanently in place

- Shovels
- Hoes
- Marking Knives
- Row-end Markers
- T-post Pullers
- Chain Wrench
- Knipex Wire Cutter

All Steel & Wire Product Color Guide

Gauge	Color	Gauge	Color
7	Brown	12.5	Yellow
10	Black	13	Green
11	White	14	Red
12	Blue	15	Grey
12 Soft	Blue & Red	16	Orange

Decimal & Gauge Equivalents

12 Gauge = .096* (2.70 mm)	13 Gauge = .0827* (2.32 mm)	14 gauge = .074* (2.03 mm)

*Within ± .005

Fraction & Decimal Equivalents

FRACTION	DECIMAL	FEET/ POUND	FRACTION	DECIMAL	FEET/ POUND	FRACTION	DECIMAL	FEET/ POUND	FRACTION	DECIMAL	FEET/ POUND
1/64"	.0156	1460	17/64"	.2656	5.29	33/64"	.5156	1.41	49/64"	.7656	.638
1/32"	.0312	389	9/32"	.2812	4.74	17/32"	.5312	1.33	25/32"	.7812	.613
3/64"	.0469	169	19/64"	.2969	4.24	35/64"	.5469	1.25	51/64"	.7969	.589
1/16"	0.625	97.3	5/16"	.3125	3.84	9/16"	.5625	1.18	13/16"	.8125	.567
5/64"	.0781	61.5	21/64"	.3281	3.48	37/64"	.5781	1.12	53/64"	.8281	.546
3/32"	.0937	42.3	11/32"	.3437	3.16	19/32"	.5937	1.06	27/32"	.8437	.525
7/64"	.1094	31.5	23/64"	.3594	2.90	39/64"	.6094	1.01	55/64"	.8594	.507
1/8"	.1250	23.9	3/8"	.2750	1.95	5/8"	.6250	.958	7/8"	.8750	.489
9/64"	.1406	18.8	25/64"	.3906	2.45	41/64"	.6406	.911	57/64"	.8906	.471
5/32"	.1562	15.4	13/32"	.4062	2.27	21/32"	.6562	.869	29/32"	.9062	.456
11/64"	.1719	12.6	27/64"	.4219	2.10	43/64"	.6719	.828	59/64"	.9219	.440
3/16"	.1875	10.6	7/16"	.4375	1.95	11/16"	.6875	.790	15/16"	.9375	.425
13/64"	.2031	9.08	29/64"	.4531	1.82	45/64"	.7031	.757	61/64"	.9531	.412
7/32"	.2187	7.80	15/32"	.4687	1.70	23/32"	.7187	.724	31/32"	.9687	.399
15/64"	.2344	6.83	31/64	.4844	1.60	47/64"	.7344	.694	63/64"	.9844	.386
1/4"	.2500	5.99	1/2"	.5000	1.50	3/4"	.7500	.665	1"	1.000	.374

Steel Wire Gauges

GAUGE		DECIMAL	FEET/ POUND	GAUGE		DECIMAL	FEET/ POUND	GAUGE		DECIMAL	FEET/ POUND
7/0	7/0	0.490"	1.56	3	3	0.244"	6.28	12	12	0.106"	33.3
	1/4	0.483"	1.60		1/4	0.239"	6.55		1/4	0.102"	36.0
	1/2	0.476"	1.65		1/2	0.234"	6.83		1/2	0.099"	38.2
	3/4	0.469"	1.70		3/4	0.230"	7.07		3/4	0.095"	41.5
6/0	6/0	0.462"	1.75	4	4	0.225"	7.39	13	13	0.092"	44.2
	1/4	0.454"	1.82		1/4	0.221"	7.66		1/4	0.089"	47.2
	1/2	0.446"	1.88		1/2	0.216"	8.02		1/2	0.086"	50.6
	3/4	0.438"	1.95		3/4	0.212"	8.32		3/4	0.083"	54.3
5/0	5/0	0.430"	2.02	5	5	0.207"	8.73	14	14	0.080"	58.5
	1/4	0.421'	2.11		1/4	0.203"	9.08		1/4	0.078"	61.5
	1/2	0.412"	2.20		1/2	0.200"	9.35		1/2	0.076"	64.8
	3/4	0.403"	2.30		3/4	0.196"	9.74		3/4	0.074"	68.3
4/0	4/0	0.394"	2.41	6	6	0.192"	10.1	15	15	0.072"	72.2
	1/4	0.386"	2.51		1/4	0.188"	10.6		1/4	0.070"	76.4
	1/2	0.378"	2.62		1/2	0.184"	11.1		1/2	0.067"	83.3
	3/4	0.370"	2.73		3/4	0.181"	11.4		3/4	0.065"	88.6
3/0	3/0	0.362"	2.85	7	7	0.177"	11.9	16	16	0.062"	97.3
	1/4	0.355"	2.97		1/4	0.173"	12.5		1/4	0.060"	104
	1/2	0.347"	3.11		1/2	0.170"	12.9		1/2	0.058"	111
	3/4	0.339"	3.26		3/4	0.166"	13.6		3/4	0.056"	119
2/0	2/0	0.331"	3.41	8	8	0.162"	14.3	17	17	0.054"	128
	1/4	0.325"	3.54		1/4	0.159"	14.8		1/4	0.052"	138
	1/2	0.319"	3.68		1/2	0.155"	15.6		1/2	0.051"	144
	3/4	0.313"	3.82		3/4	0.152"	16.2		3/4	0.049"	156
1/0	1/0	0.306"	4.00	9	9	0.148"	17.1	18	18	0.048"	162
	1/4	0.301"	4.13		1/4	0.145"	17.8		1/4	0.046"	177
	1/2	0.295"	4.30		1/2	0.142"	18.6		1/2	0.044"	193
	3/4	0.289"	4.48		3/4	0.138"	19.6		3/4	0.043"	202
1	1	0.283"	4.67	10	10	0.135"	20.5	19	19	0.041"	223
	1/4	0.278"	4.84		1/4	0.131"	21.8		1/4	0.039"	246
	1/2	0.273"	5.02		1/2	0.128"	22.8		1/2	0.038"	259
	3/4	0.268"	5.21		3/4	0.124"	24.3		3/4	0.036"	289
2	2	0.262"	5.45	11	11	0.120"	26.0	20	20	0.035"	309
	1/4	0.258"	5.62		1/4	0.117"	27.3		1/4	0.034"	325
	1/2	0.253"	5.84		1/2	0.113"	29.3		1/2	0.033"	341
	3/4	0.248"	6.08		3/4	0.109"	31.5		3/4	0.032"	357

Vine / Wire Calculator

Plant space X row width = A
43,560 divide A = No. of plants/acre
No. of plants X plant space = footage of 1 wire/acre

Planting Pattern	One-Wire System No.1 of Wire Feet Required per Acre	No. of Plants Required per Acre
3 X 3	14,520'	4,840
3 X 4	10,890'	3,630
3 X 5	8,712'	2,904
4 X 5	8,712'	2,178
3 X 6	7,260'	2,420
4 X 6	7,260'	1,815
5 X 6	7,260'	1,452
6 X 6	7,260'	1,210
3 X 7	6,222'	2,074
4 X 7	6,222'	1,555
5 X 7	6,222'	1,245
6 X 7	6,222'	1,037
7 X 7	6,222'	889
3 X 8	5,445'	1,815
3.5 X 8	5,445'	1,558
4 X 8	5,445'	1,361
5 X 8	5,445'	1,089
6 X 8	5,445'	907
7 X 8	5,445'	778
8 X 8	5,445'	681
3 X 9	4,840'	1,613
4 X 9	4,840'	1,210
5 X 9	4,840'	988
6 X 9	4,840'	807
7 X 9	4,840'	691
8 X 9	4,840'	605
3 X 10	4,356'	1,452
3.5 X 10	4,356'	1,245
4 X 10	4,356'	1,089
5 X 10	4,356'	871
6 X 10	4,356'	726
7 X 10	4,356'	622
8 X 10	4,356'	544
3 X 11	3,960'	1,320
3.5 X 11	3,960'	1,131
4 X 11	3,960'	990
5 X 11	3,960'	792
6 X 11	3,960'	660
7 X 11	3,960'	565
8 X 11	3,960'	495
3 X 12	3,630'	1,210
3.5 X 12	3,630'	1,037
4 X 12	3,630'	908
5 X 12	3,630'	726
6 X 12	3,630'	605
7 X 12	3,630'	518
8 X 12	3,630'	454

VINEYARD SUPPLY INC

CREDIT APPLICATION

BUSINESS INFORMATION: Date: _____

Legal Name: _____ Phone number: _____

Trade Name (DBA): _____ Fax number: _____

Street address: _____ City: _____ State: _____ Zip: _____

Billing address: _____ City: _____ State: _____ Zip: _____

Purchasing agent: _____ Office phone: _____ Fax: _____

E-mail: _____ Cell phone: _____

A/P Contact: _____ Office phone: _____ Fax: _____

E-mail: _____ Cell phone: _____

Type of business: _____ Years in business: _____ Fed: Tax ID#: _____

Type of entity: Sole proprietor __ Partnership __ Corporation __ Ltd. Liab. Corp __ Resale # _____

BANK REFERENCES:

Bank name: _____ Phone#: _____ Acct #: _____

Bank name: _____ Phone#: _____ Acct #: _____

TRADE REFERENCES:

Name: _____ Phone #: _____ Facsimile #: _____

Account Number: _____ Contact Name: _____

Name: _____ Phone #: _____ Facsimile #: _____

Account Number: _____ Contact Name: _____

Name: _____ Phone #: _____ Facsimile #: _____

Account Number: _____ Contact Name: _____

OFFICERS/PRINCIPALS OF COMPANY:

Name: _____ Title: _____ SSN: _____ % ownership: _____

Name: _____ Title: _____ SSN: _____ % ownership: _____

Name: _____ Title: _____ SSN: _____ % ownership: _____

All statements made herein are true and accurate to the best of my knowledge. I authorize A&J Vineyard Supply Inc to make any and all inquiries necessary for action on this credit application. I hereby indemnify A&J Vineyard Supply Inc and its agents from any liability resulting from their credit survey. * **Credit terms are Net 15 days. A service charge of 1.5% per month is added on past due amounts.**

Authorized signature: _____ Title: _____ Date:_____

1192 Maple Lane, Building A, Calistoga, CA 94515
707.963.5354 Phone 707.967.8242 Fax

PARTIAL EXEMPTION CERTIFICATE **STATE BOARD OF EQUALIZATION**

Qualified Sales and Purchases of Farm Equipment and Machinery

NOTE: This is an exemption only from the state general fund portion of the sales and use tax rate. You are not relieved from your obligations for the local and district taxes on this transaction. This partial exemption also does not apply to any tax levied pursuant to Section 6051.2 and 6201.2 of the Revenue and Taxation Code, or pursuant to Section 35 of article XIII of the California Constitution. This partial exemption also applies to lease payments made on or after September 1, 2001, for tangible personal property even if the lease agreement was entered into prior to September 1, 2001.

SELLER'S/LESSOR'S NAME
A&J Vineyard Supply Inc.
SELLER'S/LESSOR'S ADDRESS (Street, City, State, Zip Code)
1192 Maple Lane, Bldg A
Calistoga, CA 94515

I, as the undersigned purchaser, hereby certify I am engaged in an agricultural business described in Codes 0111 to 0291 of the Standard Industrial Classification (SIC) Manual, or I perform an agricultural service described in Codes 0711 to 0783 of the SIC Manual for such classified persons. The property purchased or leased will be used primarily in producing and harvesting agricultural products in accordance with Revenue & Taxation Code Section 6356.5.[1]

Type of Farm Equipment and Machinery (or parts[2] thereof)* _____

_____

*If you also want this certificate to be used as a blanket certificate for future purchases, describe generally the type of property you will be purchasing and ask your vendor to keep this certificate on file. If this is a specific partial exemption certificate, provide the purchase order or sales invoice number and a precise description of the property being purchased.

I understand that if such property is not used in the manner qualifying for the partial exemption, or if I am not a qualified person, as applicable, that I am required by the Sales and Use Tax Law to report and pay the state tax measured by the sales price/rentals payable of the property to/by me. I also understand that this partial exemption certificate is in effect as of the date shown below and will remain in effect until revoked in writing.

PURCHASER'S NAME OR COMPANY NAME (If applicable)		DATE
SIGNATURE **(signature of the purchaser, purchaser's employee, or authorized representative of the purchaser)**		PERMIT NUMBER (If applicable)[3]
TITLE		TELEPHONE NUMBER
ADDRESS	CITY	STATE, ZIP

1. Vehicles that qualify as farm equipment and machinery, as defined in Regulation 1533.1(b)(1)(B), must be used exclusively in producing and harvesting agricultural products.
2. If you are purchasing oil, grease, or lubricating or other qualifying fluids, indicate what percentage will be used in farm equipment and machinery performing qualified producing and harvesting activities.
3. If you are not required to hold a seller's permit, please enter "Not Applicable."

****

The proposed revisions contained in this document may not be adopted. Any revisions that are adopted may differ from this text.